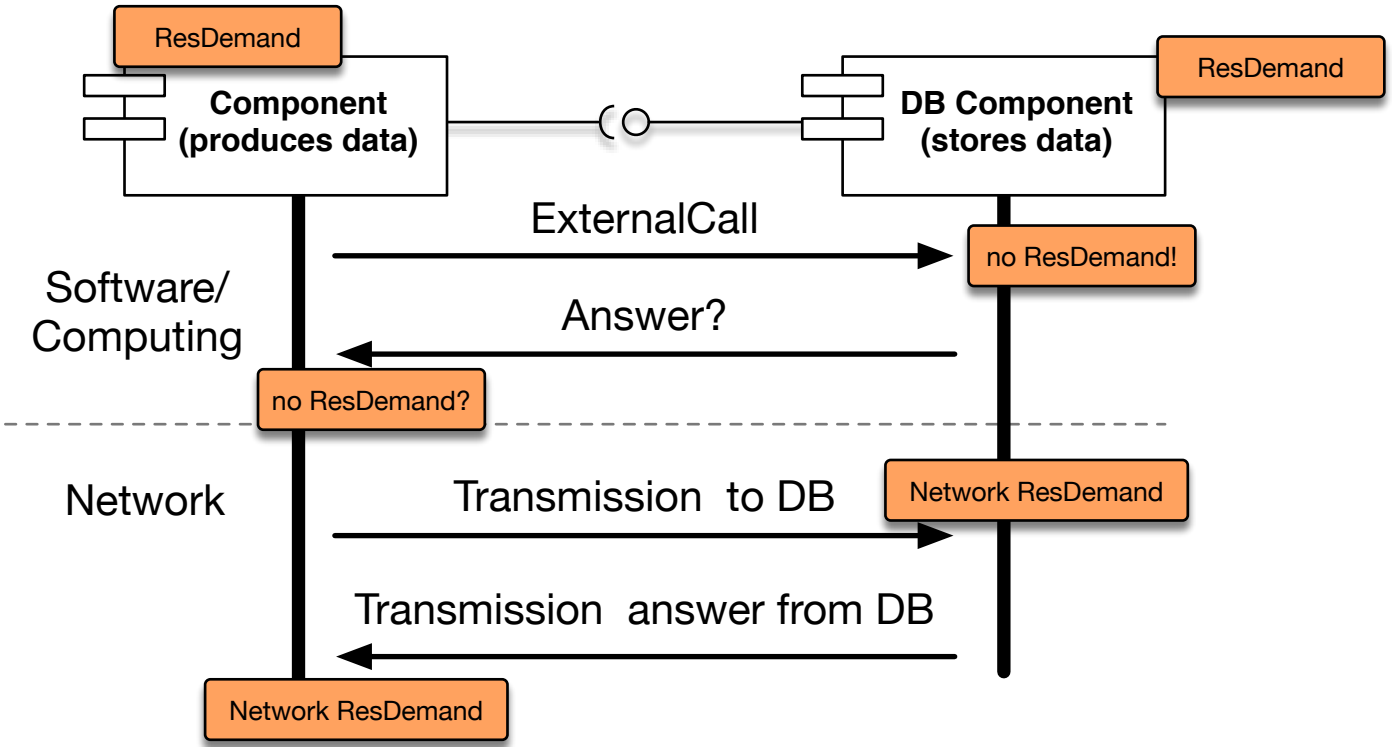
ResDemand
Component
(produces data)
DB Component
(stores data)
ResDemand
ExternalCall
no ResDemand!
Software/
Computing
Answer?
no ResDemand?
Network
Transmission to DB
Network ResDemand
Transmission answer from DB
Network ResDemand