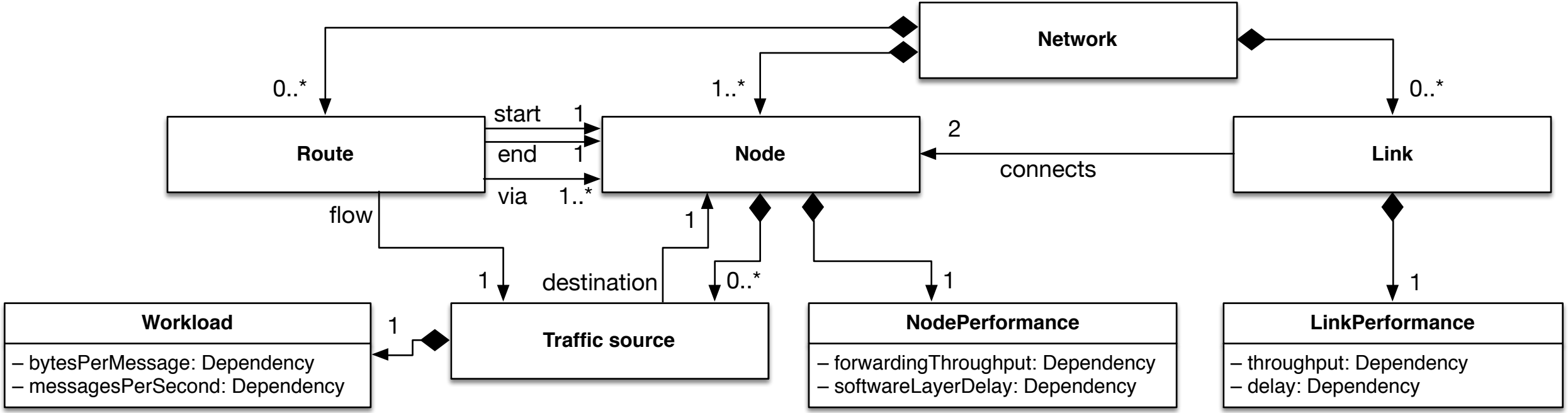
Network
0..*
1..*
0..*
Route
start
1
end
1
via
1..*
Node
2
connects
Link
flow
1
1
destination
0..*
1
1
Workload
– bytesPerMessage: Dependency
– messagesPerSecond: Dependency
1
Traffic source
NodePerformance
– forwardingThroughput: Dependency
– softwareLayerDelay: Dependency
LinkPerformance
– throughput: Dependency
– delay: Dependency