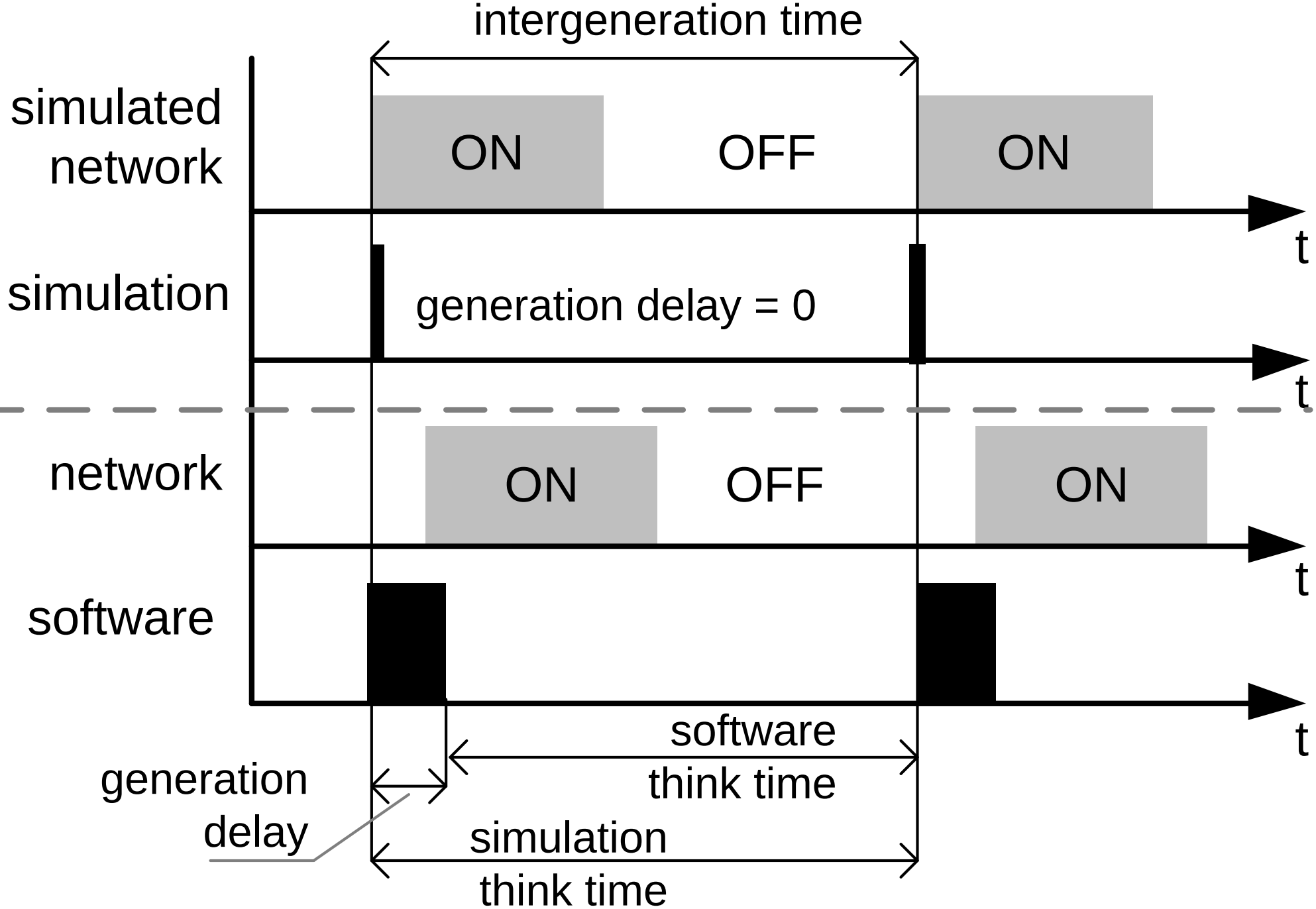
intergeneration time
simulated network
ON
OFF
ON
t
simulation
generation delay = 0
t
network
ON
OFF
ON
t
software
t
software think time
generation delay
simulation think time