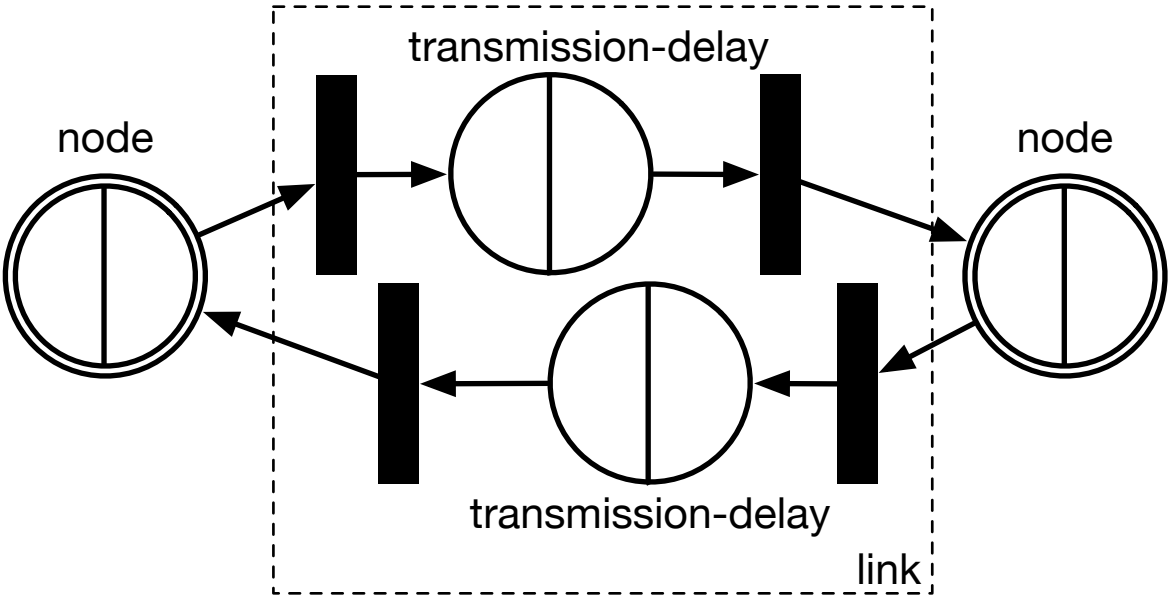
transmission-delay
node
node
transmission-delay
link